OPENING			H	E	C	J	D	L	M	S	BARS E							BARS E_1				#4 BARS J		BARS O				#4 BARS P		#4 BARS H		#4 BARS V		BARS M			#4 BARS TH		#4 BARS TH1		#4 BARS TV		#4 BARS TV1		CONC.	STEEL
Dia. in.	No.	Area sq.ft.	Lgth. ft.in.	Lgth. ft.in.	Lgth. ft.in.	Lgth. ft.in.	Lgth. ft.in.	Lgth. ft.in.	Lgth. ft.in.	Lgth. ft.in.	Size	No.	Lgth. ft.in.	Spc. in.	X ft.in.	Y in.	Z ft.in.	Size	No.	Lgth. ft.in.	Spc. in.	No.	Lgth. ft.in.	Size	No.	Lgth. ft.in.	Spc. in.	No.	Lgth. ft.in.	No.	Lgth. ft.in.	No.	Lgth. ft.in.	No.	Lgth. ft.in.	Size	No.	Lgth. ft.in.	No.	Lgth. ft.in.	No.	Lgth. ft.in.	No.	Lgth. ft.in.	CU. YDS.	LBS.
60	1	19.6	7- 0	1- 1	0- 8	5- 0	1- 0	16- 2	39- 3	1-11	4	78	4- 6	5.0	1- 4	2	3- 0	4	39	5- 5	10.0	12	15-10	4	59	6- 5	8.0	11	38-11	0	0- 0	0	0- 0	0	0- 0	0	0	4	2	38-11	0	0- 0	0	0- 0	0	0- 0	0	0	16.88	1096
60	2	39.3	7- 0	1- 1	0- 8	5- 0	1- 0	16- 2	48- 5	1-11	4	84	4- 6	5.0	1- 4	2	3- 0	4	42	5- 5	10.0	12	15-10	4	73	6- 5	8.0	11	48- 1	6	1-11	12	8	4	2	48- 1	0	0- 0	0	0- 0	0	0- 0	0	0- 0	0	0- 0	0	0	20.20	1275
60	3	58.9	7- 0	1- 1	0- 8	5- 0	1- 0	16- 2	57- 7	1-11	4	90	4- 6	5.0	1- 4	2	3- 0	4	45	5- 5	10.0	12	15-10	4	87	6- 5	8.0	11	57- 3	12	1-11	18	8	4	2	57- 3	0	0- 0	0	0- 0	0	0- 0	0	0- 0	0	0- 0	0	0	23.53	1453
60	4	78.5	7- 0	1- 1	0- 8	5- 0	1- 0	16- 2	66-10	1-11	4	96	4- 6	5.0	1- 4	2	3- 0	4	48	5- 5	10.0	12	15-10	4	101	6- 5	8.0	11	66- 6	18	1-11	24	8	4	2	66- 6	0	0- 0	0	0- 0	0	0- 0	0	0- 0	0	0- 0	0	0	26.89	1633
60	5	98.1	7- 0	1- 1	0- 8	5- 0	1- 0	16- 2	76- 0	1-11	4	102	4- 6	5.0	1- 4	2	3- 0	4	51	5- 5	10.0	12	15-10	4	115	6- 5	8.0	11	75- 8	24	1-11	30	8	4	2	75- 8	0	0- 0	0	0- 0	0	0- 0	0	0- 0	0	0- 0	0	0	30.21	1812
60	6	117.7	7- 0	1- 1	0- 8	5- 0	1- 0	16- 2	85- 2	1-11	4	108	4- 6	5.0	1- 4	2	3- 0	4	54	5- 5	10.0	12	15-10	4	128	6- 5	8.0	11	84-10	30	1-11	36	8	4	2	84-10	0	0- 0	0	0- 0	0	0- 0	0	0- 0	0	0- 0	0	0	33.54	1986
72	1	28.3	8- 2	1- 3	0- 9	5- 6	1- 0	18-10	45-11	2- 0	4	114	5- 0	4.0	1- 7	2	3- 3	4	57	6- 4	8.0	14	18- 6	4	100	7- 2	5.5	11	45- 7	0	0- 0	8	8	4	2	45- 7	0	0- 0	0	0- 0	0	0- 0	0	0- 0	0	0- 0	0	0	23.15	1673
72	2	56.5	8- 2	1- 3	0- 9	5- 6	1- 0	18-10	56- 7	2- 0	4	121	5- 0	4.0	1- 7	2	3- 3	4	61	6- 4	8.0	14	18- 6	4	124	7- 2	5.5	11	56- 3	7	2- 0	16	8	4	2	56- 3	0	0- 0	0	0- 0	0	0- 0	0	0- 0	0	0- 0	0	0	27.54	1933
72	3	84.8	8- 2	1- 3	0- 9	5- 6	1- 0	18-10	67- 2	2- 0	4	128	5- 0	4.0	1- 7	2	3- 3	4	65	6- 4	8.0	14	18- 6	4	147	7- 2	5.5	11	66-10	14	2- 0	24	8	4	2	66-10	0	0- 0	0	0- 0	0	0- 0	0	0- 0	0	0- 0	0	0	31.88	2189
72	4	113.0	8- 2	1- 3	0- 9	5- 6	1- 0	18-10	77- 9	2- 0	4	135	5- 0	4.0	1- 7	2	3- 3	4	69	6- 4	8.0	14	18- 6	4	170	7- 2	5.5	11	77- 5	21	2- 0	32	8	4	2	77- 5	0	0- 0	0	0- 0	0	0- 0	0	0- 0	0	0- 0	0	0	36.22	2444
72	5	141.3	8- 2	1- 3	0- 9	5- 6	1- 0	18-10	88- 5	2- 0	4	142	5- 0	4.0	1- 7	2	3- 3	4	73	6- 4	8.0	14	18- 6	4	193	7- 2	5.5	11	88- 1	28	2- 0	40	8	4	2	88- 1	0	0- 0	0	0- 0	0	0- 0	0	0- 0	0	0- 0	0	0	40.60	2700
72	6	169.6	8- 2	1- 3	0- 9	5- 6	1- 0	18-10	99- 0	2- 0	4	149	5- 0	4.0	1- 7	2	3- 3	4	77	6- 4	8.0	14	18- 6	4	216	7- 2	5.5	11	98- 8	35	2- 0	48	8	4	2	98- 8	0	0- 0	0	0- 0	0	0- 0	0	0- 0	0	0- 0	0	0	44.94	2955
84	1	38.5	9- 4	1- 6	0-11	5-11	1- 0	21- 7	52- 9	3- 0	5	104	5-11	5.0	1-11	3	3- 9	5	52	7- 4	10.0	16	21- 3	4	141	8- 0	4.5	12	52- 5	0	0- 0	9	8	5	4	52- 5	12	21- 3	0	0- 0	30	9- 0	6	8	32.32	3017
84	2	76.9	9- 4	1- 6	0-11	5-11	1- 0	21- 7	65-11	3- 0	5	113	5-11	5.0	1-11	3	3- 9	5	57	7- 4	10.0	16	21- 3	4	176	8- 0	4.5	12	65- 7	8	3- 2	18	8	5	4	65- 7	12	21- 3	6	3- 2	33	9- 0	12	8	38.79	3512
84	3	115.4	9- 4	1- 6	0-11	5-11	1- 0	21- 7	79- 0	3- 0	5	122	5-11	5.0	1-11	3	3- 9	5	62	7- 4	10.0	16	21- 3	4	211	8- 0	4.5	12	78- 8	16	3- 2	27	8	5	4	78- 8	12	21- 3	12	3- 2	36	9- 0	18	8	45.19	4007
84	4	153.9	9- 4	1- 6	0-11	5-11	1- 0	21- 7	92- 2	3- 0	5	131	5-11	5.0	1-11	3	3- 9	5	67	7- 4	10.0	16	21- 3	4	246	8- 0	4.5	12	91-10	24	3- 2	36	8	5	4	91-10	12	21- 3	18	3- 2	39	9- 0	24	8	51.66	4503
84	5	192.3	9- 4	1- 6	0-11	5-11	1- 0	21- 7	105- 3	3- 0	5	140	5-11	5.0	1-11	3	3- 9	5	72	7- 4	10.0	16	21- 3	4	281	8- 0	4.5	12	104-11	32	3- 2	45	8	5	4	104-11	12	21- 3	24	3- 2	42	9- 0	30	8	58.07	4997
84	6	230.8	9- 4	1- 6	0-11	5-11	1- 0	21- 7	118- 5	3- 0	5	149	5-11	5.0	1-11	3	3- 9	5	77	7- 4	10.0	16	21- 3	4	316	8- 0	4.5	12	118- 1	40	3- 2	54	8	5	4	118- 1	12	21- 3	30	3- 2	45	9- 0	36	8	64.53	5493
96	1	50.2	10- 6	2- 0	1- 1	6- 4	1- 1	24- 3	59- 6	3- 0	5	130	6-10	4.5	2- 7	3	4- 0	5	65	8- 3	9.0	18	23-11	5	119	9- 1	6.0	14	59- 2	0	0- 0	10	8	6	4	59- 2	12	23-11	0	0- 0	34	10- 2	7	8	45.78	4241
96	2	100.5	10- 6	2- 0	1- 1	6- 4	1- 1	24- 3	73-11	3- 0	5	139	6-10	4.5	2- 7	3	4- 0	5	70	8- 3	9.0	18	23-11	5	148	9- 1	6.0	14	73- 7	9	3- 2	20	8	6	4	73- 7	12	23-11	6	3- 2	37	10- 2	14	8	54.38	4904
96	3	150.7	10- 6	2- 0	1- 1	6- 4	1- 1	24- 3	88- 5	3- 0	5	148	6-10	4.5	2- 7	3	4- 0	5	75	8- 3	9.0	18	23-11	5	177	9- 1	6.0	14	88- 1	18	3- 2	30	8	6	4	88- 1	12	23-11	12	3- 2	40	10- 2	21	8	63.05	5569
96	4	201.0	10- 6	2- 0	1- 1	6- 4	1- 1	24- 3	102-11	3- 0	5	157	6-10	4.5	2- 7	3	4- 0	5	80	8- 3	9.0	18	23-11	5	206	9- 1	6.0	14	102- 7	27	3- 2	40	8	6	4	102- 7	12	23-11	18	3- 2	43	10- 2	28	8	71.73	6233
96	5	251.2	10- 6	2- 0	1- 1	6- 4	1- 1	24- 3	117- 4	3- 0	5	166	6-10	4.5	2- 7	3	4- 0	5	85	8- 3	9.0	18	23-11	5	235	9- 1	6.0	14	117- 0	36	3- 2	50	8	6	4	117- 0	12	23-11	24	3- 2	46	10- 2	35	8	80.33	6896
96	6	301.4	10- 6	2- 0	1- 1	6- 4	1- 1	24- 3	131-10	3- 0	5	175	6-10	4.5	2- 7	3	4- 0	5	90	8- 3	9.0	18	23-11	5	264	9- 1	6.0	14	131- 6	45	3- 2	60	8	6	4	131- 6	12	23-11	30	3- 2	49	10- 2	42	8	89.01	7561
108	1	63.6	11- 8	2- 6	1- 2	6-10	1- 2	26-11	66- 2	3- 0	5	162	7- 9	4.0	3- 2	3	4- 4	5	81	9- 2	8.0	22	26- 7	5	159	10- 2	5.0	16	65-10	0	0- 0	12	8	6	4	65-10	14	26- 7	0	0- 0	38	11- 4	7	8	60.45	5806
108	2	127.2	11- 8	2- 6	1- 2	6-10	1- 2	26-11	82- 0	3- 0	5	173	7- 9	4.0	3- 2	3	4- 4	5	87	9- 2	8.0	22	26- 7	5	197	10- 2	5.0	16	81- 8	11	3- 2	24	8	6	4	81- 8	14	26- 7	7	3- 2	41	11- 4	14	8	71.52	6689
108	3	190.8	11- 8	2- 6	1- 2	6-10	1- 2	26-11	97- 9	3- 0	5	184	7- 9	4.0	3- 2	3	4- 4	5	93	9- 2	8.0	22	26- 7	5	235	10- 2	5.0	16	97- 5	22	3- 2	36	8	6	4	97- 5	14	26- 7	14	3- 2	44	11- 4	21	8	82.51	7571
108	4	254.3	11- 8	2- 6	1- 2	6-10	1- 2	26-11	113- 7	3- 0	5	195	7- 9	4.0	3- 2	3	4- 4	5	99	9- 2	8.0	22	26- 7	5	273	10- 2	5.0	16	113- 3	33	3- 2	48	8	6	4	113- 3	14	26- 7	21	3- 2	47	11- 4	28	8	93.59	8454
108	5	317.9	11- 8	2- 6	1- 2	6-10	1- 2	26-11	129- 5	3- 0	5	205	7- 9	4.0	3- 2	3	4- 4	5	105	9- 2	8.0	22	26- 7	5	311	10- 2	5.0	16	129- 1	44	3- 2	60	8	6	4	129- 1	14	26- 7	28	3- 2	50	11- 4	35	8	104.66	9337
108	6	381.5	11- 8	2- 6	1- 2	6-10	1- 2	26-11	145- 3	3- 0	5	217	7- 9	4.0	3- 2	3	4- 4	5	111	9- 2	8.0	22	26- 7	5	349	10- 2	5.0	16	144-11	55	3- 2	72	8	6	4	144-11	14	26- 7	35	3- 2	53	11- 4	42	8	115.74	10220
120	1	78.5	12-10	3- 0	1- 3	7- 4	1- 3	29- 8	73- 0	3- 0	6	112	8-11	5.0	3- 9	4	4-11	6	71	10- 1	10.0	24	29- 4	5	195	11- 3	4.5	18	72- 8	0	0- 0	12	8	6	4	72- 8	16	29- 4	0	0- 0	42	12- 6	8	8	78.16	7721
120	2	157.0	12-10	3- 0	1- 3	7- 4	1- 3	29- 8	90- 2	3- 0	6	151	8-11	5.0	3- 9	4	4-11	6	76	10- 1	10.0	24	29- 4	5	241	11- 3	4.5	18	89-10	12	3- 2	26	8	6	4	89-10	16	29- 4	8	3- 2	45	12- 6	16	8	92.04	8844
120	3	235.5	12-10	3- 0	1- 3	7- 4	1- 3	29- 8	107- 4	3- 0	6	160	8-11	5.0	3- 9	4	4-11	6	81	10- 1	10.0	24	29- 4	5	286	11- 3	4.5	18	107- 0	24	3- 2	39	8	6	4	107- 0	16	29- 4	16	3- 2	48	12- 6	24	8	105.93	9955
120	4	314.0	12-10	3- 0	1- 3	7- 4	1- 3	29- 8	124- 6	3- 0	6	169	8-11	5.0	3- 9	4	4-11	6	86	10- 1	10.0	24	29- 4	5	332	11- 3	4.5	18	124- 2	36	3- 2	52	8	6	4	124- 2	16	29- 4	24	3- 2	51	12- 6	32	8	119.81	11078
120	5	392.5	12-10	3- 0	1- 3	7- 4	1- 3	29- 8	141- 8	3- 0	6	178	8-11	5.0	3- 9	4	4-11	6	91	10- 1	10.0	24	29- 4	5	378	11- 3	4.5	18	141- 4	48	3- 2	65	8	6	4	141- 4	16	29- 4	32	3- 2	54	12- 6	40	8	133.70	12200
120	6	471.0	12-10	3- 0	1- 3	7- 4	1- 3	29- 8	158-10	3- 0	6	187	8-11	5.0	3- 9	4	4-11	6	96	10- 1	10.0	24	29- 4	5	424	11- 3	4.5	18	158- 6	60	3- 2	78	8	6	4	158- 6	16	29- 4	40	3- 2	57	12- 6	48	8	147.58	13323
132	1	95.0	14- 0	3- 7	1- 5	7- 9	1- 5	32- 4	79- 8	3- 0	6	172	10- 1	4.5	4- 6	4	5- 4	6	86	11- 0	9.0	26	32- 0	5	213	12- 5	4.5	20	79- 4	0	0- 0	14	8	6	4	79- 4	18	32- 0	0	0- 0	44	13- 8	9	8	105.06	9676
132	2	190.0	14- 0	3- 7	1- 5	7- 9	1- 5	32- 4	98- 2	3- 0	6	181	10- 1	4.5	4- 6	4	5- 4	6	91	11- 0	9.0	26	32- 0	5	262	12- 5	4.5	20	97-10	13	3- 2	28	8	6	4	97-10	18	32- 0	9	3- 2	47	13- 8	18	8	123.29	10972
132	3	285.0	14- 0	3- 7	1- 5	7- 9	1- 5	32- 4	116- 8	3- 0	6	190	10- 1	4.5	4- 6	4	5- 4	6	96	11- 0	9.0	26	32- 0	5	311	12- 5	4.5	20	116- 4	26	3- 2	42	8	6	4	116- 4	18	32- 0	18	3- 2	50	13- 8	27	8	141.51	12269
132	4	379.9	14- 0	3- 7	1- 5	7- 9	1- 5	32- 4	135- 3	3- 0	6	199	10- 1	4.5	4- 6	4	5- 4	6	101	11- 0	9.0	26	32- 0	5	361	12- 5	4.5	20	134-11	39	3- 2	56	8	6	4	134-11	18	32- 0	27	3- 2	53	13- 8	36	8	159.85	13580
132	5	474.9	14- 0	3- 7	1- 5	7- 9	1- 5	32- 4	153- 9	3- 0	6	208	10- 1	4.5	4- 6	4	5- 4	6	106	11- 0	9.0	26	32- 0	5	410	12- 5	4.5	20	153- 5	52	3- 2	70	8	6	4	153- 5	18	32- 0	36	3- 2	56	13- 8	45	8	178.08	14876
132	6	569.9	14- 0	3- 7	1- 5	7- 9	1- 5	32- 4	172- 3	3- 0	6	217	10- 1	4.5	4- 6	4	5- 4	6	111	11- 0	9.0	26	32- 0	5	459	12- 5	4.5	20	171-11	65	3- 2	84	8	6	4	171-11	18	32- 0	45	3- 2	59	13- 8	54	8	196.31	16172
144	1	113.0	15- 2	4- 2	1- 6	8- 3	1- 6	35- 0	86- 4	3- 0	6	210	11- 1	4.0	5- 2	4	5- 7	6	105	12- 0	8.0	28	34- 8	5	259	13- 7	4.0	22	86- 0	0	0- 0	16	8	6	4	86- 0	18	34- 8	0	0- 0	48	14-10	10	8	130.57	12394
144	2	226.1	15- 2	4- 2	1- 6	8- 3	1- 6	35- 0	106- 3	3- 0	6	221	11- 1	4.0	5- 2	4	5- 7	6	111	12- 0	8.0	28	34- 8	5	319	13- 7	4.0	22	105-11	14	3- 2	32	8	6	4	105-11	18	34- 8	9	3- 2	51	14-10	20	8	152.92	14039
144	3	339.1	15- 2	4- 2	1- 6	8- 3	1- 6	35- 0	126- 1	3- 0	6	232	11- 1	4.0	5- 2	4	5- 7	6	117	12- 0	8.0	28	34- 8	5	378	13- 7	4.0	22	125- 9	28	3- 2	48	8	6	4	125- 9	18	34- 8	18	3- 2	54	14-10	30	8	175.13	15667
144	4	452.2	15- 2	4- 2	1- 6	8- 3	1- 6	35- 0	145-11	3- 0	6	243	11- 1	4.0	5- 2	4	5- 7	6	123	12- 0	8.0	28	34- 8	5	438	13- 7	4.0	22	145- 7	42	3- 2	64	8	6	4	145- 7	18	34- 8	27	3- 2	57	14-10	40	8	197.34	17309
144	5	565.2	15- 2	4- 2	1- 6	8- 3	1- 6	35- 0	165- 9	3- 0	6	254	11- 1	4.0	5- 2	4	5- 7	6	129	12- 0	8.0	28	34- 8	5	497	13- 7	4.0	22	165- 5	56	3- 2	80	8	6	4	165- 5	18	34- 8	36	3- 2	60	14-10	50	8	219.55	18937
144	6	678.2	15- 2	4- 2	1- 6	8- 3	1- 6	35- 0	185- 8	3- 0	6	265	11- 1	4.0	5- 2	4	5- 7	6	135	12- 0	8.0	28	34- 8	5	557	13- 7	4.0	22	185- 4	70	3- 2	96	8	6	4	185- 4	18	34- 8	45	3- 2	63	14-10	60	8	241.90	20581

FEDERAL PROJECT	STATE PROJECT	PARISH	SHEET NO.

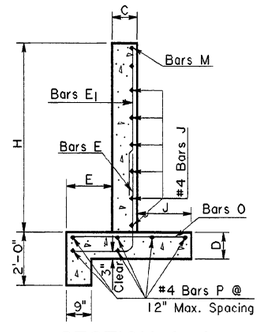

SECTION A-A

STEEL SHOWN IN BACK FACE OF WALL

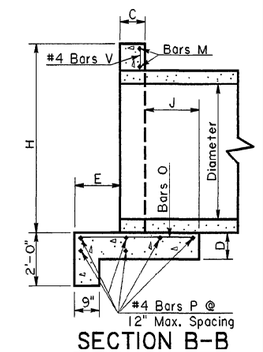

SECTION B-B

STEEL SHOWN IN BACK FACE OF WALL

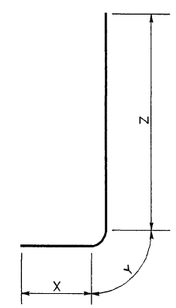

BARS E

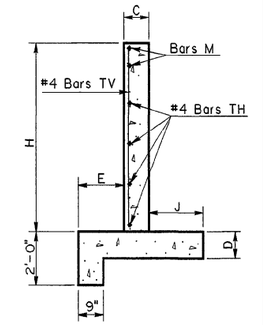

SECTION C-C

STEEL SHOWN IN FRONT FACE OF WALL

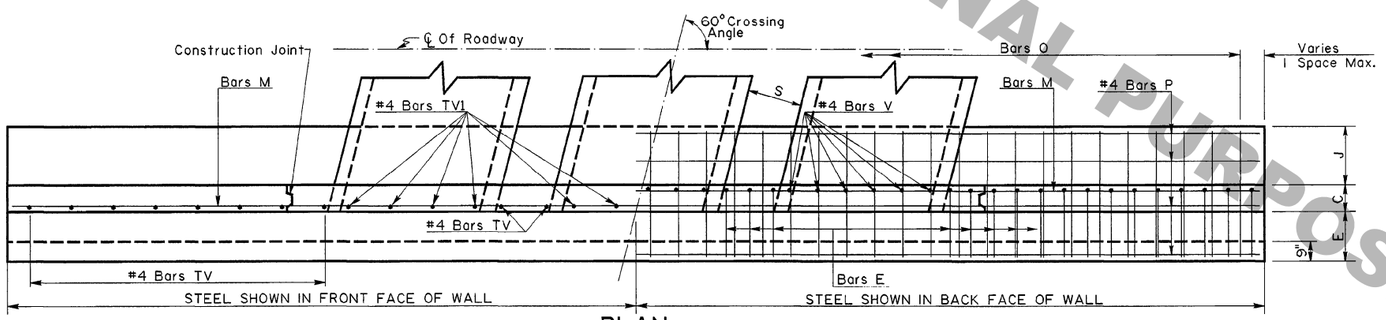

PLAN

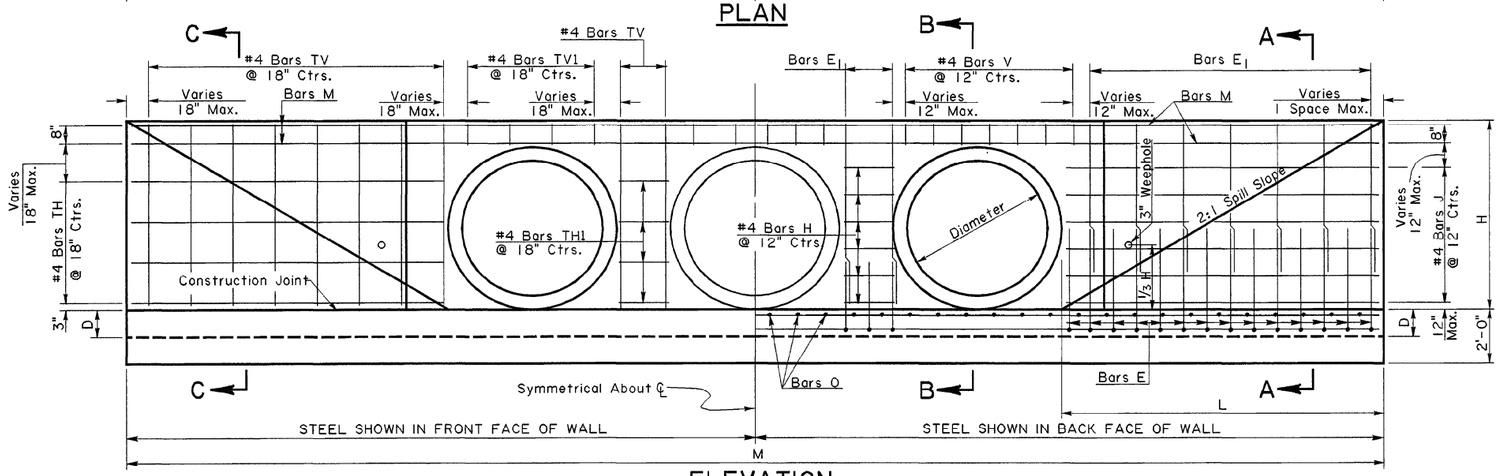

ELEVATION

GENERAL NOTES

DESIGN: Method- Headwalls are designed as retaining walls according to current AASHTO working stress procedures. Walls are designed for a lateral earth pressure of 40 psf with 2.0 feet of surcharge. Overturning- A minimum safety factor of 2.0 is provided against overturning. The resultant of loads is within the middle third of the footing. Sliding - A minimum safety factor of 1.5 is provided against sliding. The coefficient of friction between the footing and soil is 0.5. Foundation - The design soil bearing pressure is 1800 psf. When strength of the soil at the site is less than 1800 psf, bedding material shall be added under the footing as directed.

MATERIALS: Concrete- All concrete shall be class A. All exposed edges shall be ¾ inch chamfered. Reinforcing Steel - Reinforcement shall be Grade 60. Bar spacing dimensions are to bar centers. Steel required for lap splices not detailed shall not be measured for payment. Reinforcing steel shall have 2" cover unless otherwise specified. Steel and concrete quantities shown in table are for one headwall.

A 1'-6" square of geotextile fabric (see Section 1019 of the LA DOTD Standard Specifications) shall be placed in contact with concrete behind each weephole in addition to approximately 2 cu.ft. of concrete sand (see Section 1003.02 of the LA DOTD Standard Specifications).

CONSTRUCTION JOINTS: All construction joints shown are optional. For details of keyed construction joints see Standard Plan CM-49. For construction joints without key, the joint surface shall be roughened. Hardened surface shall be cleaned. Immediately before new concrete is placed, joint surface shall be saturated with water.

STATE OF LOUISIANA
WILLIAM M. RAY
REG. No. 24936
REGISTERED PROFESSIONAL ENGINEER IN CIVIL ENGINEERING
William M. Ray
7-26-01

SPECIAL DETAIL NO. HW60RCP2 — SHEET 1 OF 1

STRAIGHT HEADWALL FOR RCP ON A 60° CROSSING 60" THRU 144"

DATED January 6, 1993

STATE OF LOUISIANA
DEPARTMENT OF TRANSPORTATION AND DEVELOPMENT

DATE	DESCRIPTION	BY
11-14-97	Revised General Notes And Assigned Name HW60RCP2	JCM

REVISIONS

DESIGNED PAA	DETAILED KAJ	DIR. spdetail/headwall/
CHECKED	CHECKED PAA	FILE hwrcp.dgn

HYDRAULICS SECTION

PRELIMINARY FOR REVIEW PURPOSES ONLY

28-NOV-2007 11:06
R:\Standard Plans\Special Details\English\Old Sheets\HW60RCP2.dgn